Introduction to Digital Systems

Part III (Sequential Components)

2025/2026

Analysis of Clocked Synchronous Finite State Machines

Arnaldo Oliveira, Augusto Silva, Iouliia Skliarova, Adão Silva

Lecture Contents

- Analysis of Clocked Synchronous Finite State Machines
  - Typical structure
    - Mealy machine
    - Moore machine
  - State, transition and output tables
  - State diagrams
  - Timing analysis

Figures and most content extracted from: John F. Wakerly, "Digital Design – Principles and Practices", 4 ed., Pearson – Prentice Hall, 2006 (chapter 7). Reading chapter 7 (4th ed.) or chapter 9 (5th ed.) is highly recommended.

Introduction

- **Sequential** logic circuit or **finite state machine** (FSM)
  - Is one whose outputs depend not only on its current inputs, but also on the past sequence of inputs.

- In a sequential circuit, each advancement level is designated by a state, and each state is distinguished by its information content: previous states, internal information, and any actions to be taken.
  - When developing a circuit, it is essential to introduce a new state for each distinct situation that arises.

- For N distinct states, it is necessary Log2(N) flip-flops

Clocked Synchronous Finite State Machines

- Why?
  - "Finite State Machine" (FSM)
    - A circuit with *n* binary state variables has 2^n possible states, so as large at it might be, 2^n is always finite.
  - "Clocked"
    - They are "clocked" because their store elements employ a clock input
  - "Synchronous"
    - They are synchronous because all their flip-flops use the same clock signal.

- State change at clock "tick"

FSM Structure (Mealy Machine)

Figure 7-35 Clocked synchronous state-machine structure (Mealy machine).

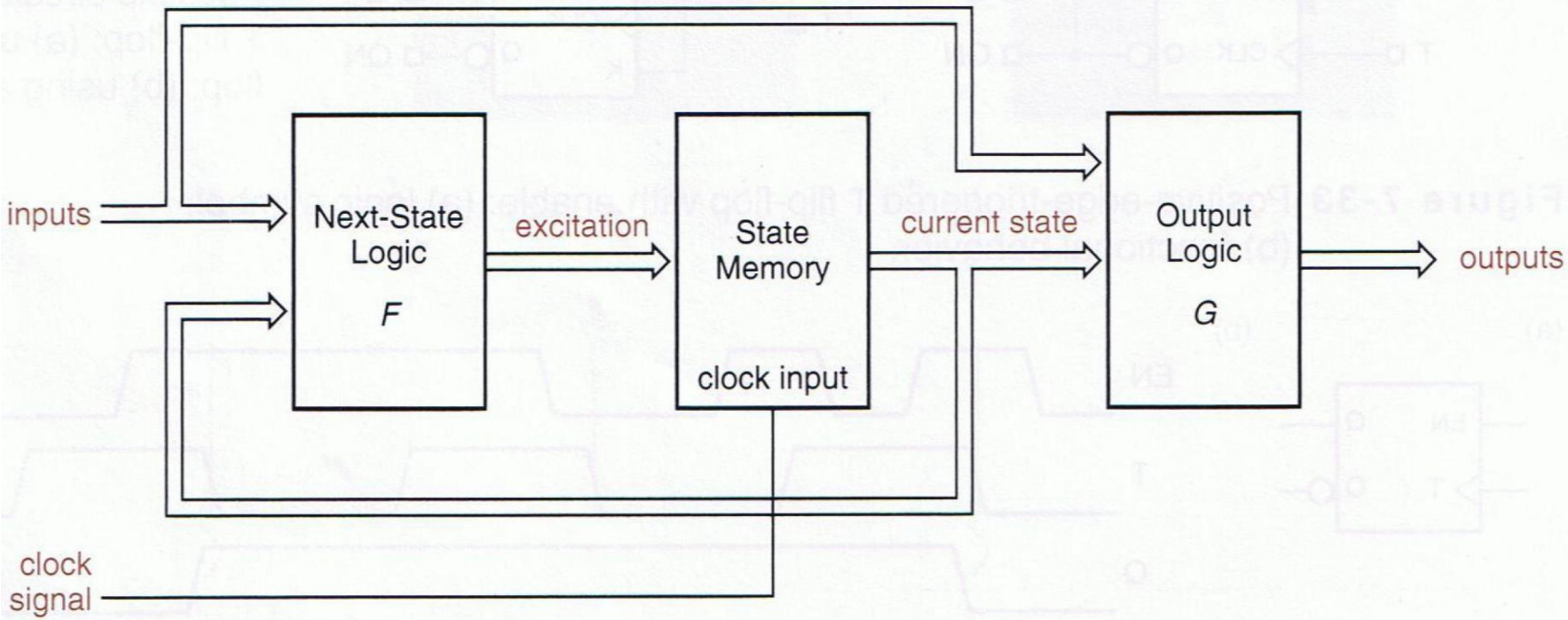

next state = F(current state, inputs)

outputs = G(current state, inputs)

FSM Structure (Moore Machine)

Figure 7-36 Clocked synchronous state-machine structure (Moore machine).

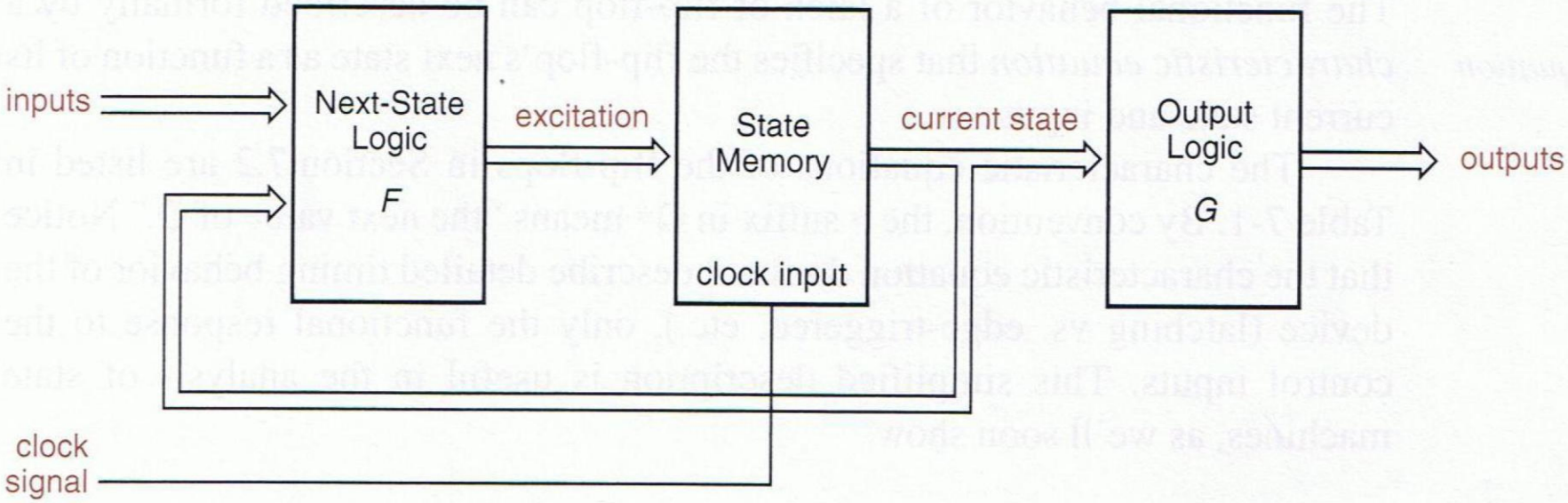

next state = F(current state, inputs)

outputs = G(current state)

Latches and Flip-flops Characteristic Equations

- Characteristic Equation – what is the next state depending on current state and input(s)?

Device Type	Characteristic Equation
S-R latch	$Q^* = S + R' \cdot Q$
D latch	$Q^* = D$
Edge-triggered D flip-flop	$Q^* = D$
D flip-flop with enable	$Q^* = EN \cdot D + EN' \cdot Q$

Table 7-1 Latch and flip-flop characteristic equations.

Clocked Synchronous FSM Analysis

The analysis of a clocked synchronous state machine has three basic steps:

1. Determine the next-state and output functions F and G.
2. Use F and G to construct a *state/output table* that completely specifies the next state and output of the circuit for every possible combination of current state and input. *state/output table*
3. (Optional) Draw a *state diagram* that presents the information from the previous step in graphical form. *state diagram*

Figure 7-35 Clocked synchronous state-machine structure (Mealy machine).

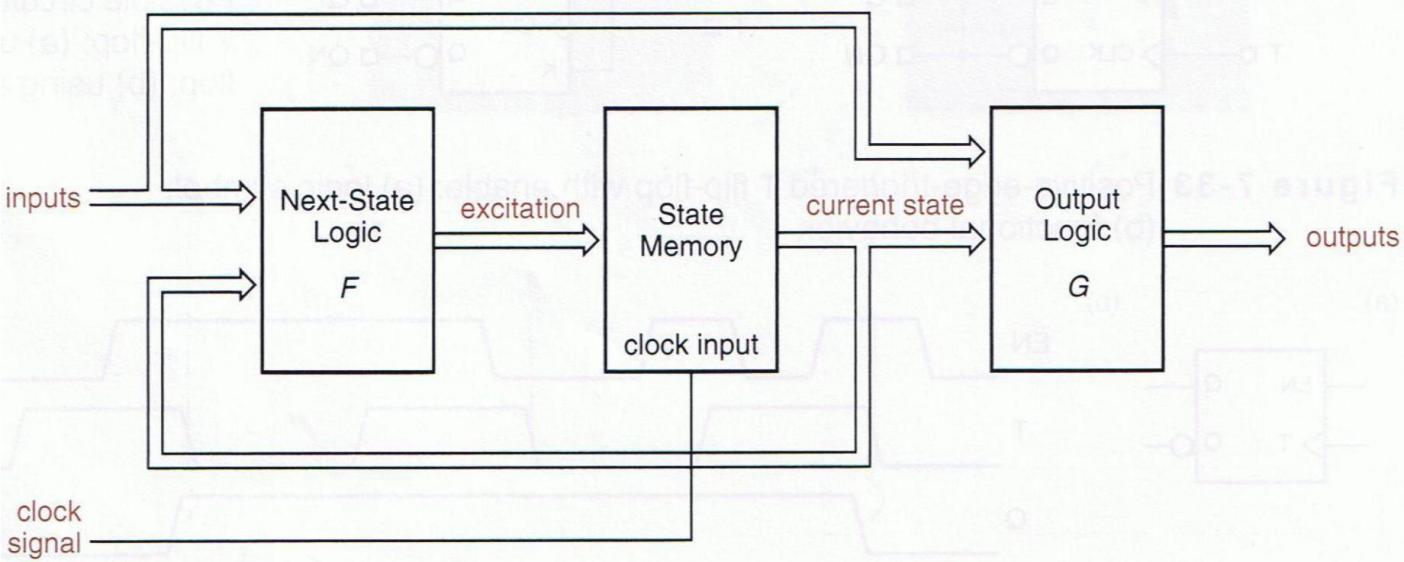

Example of an FSM Logic Circuit

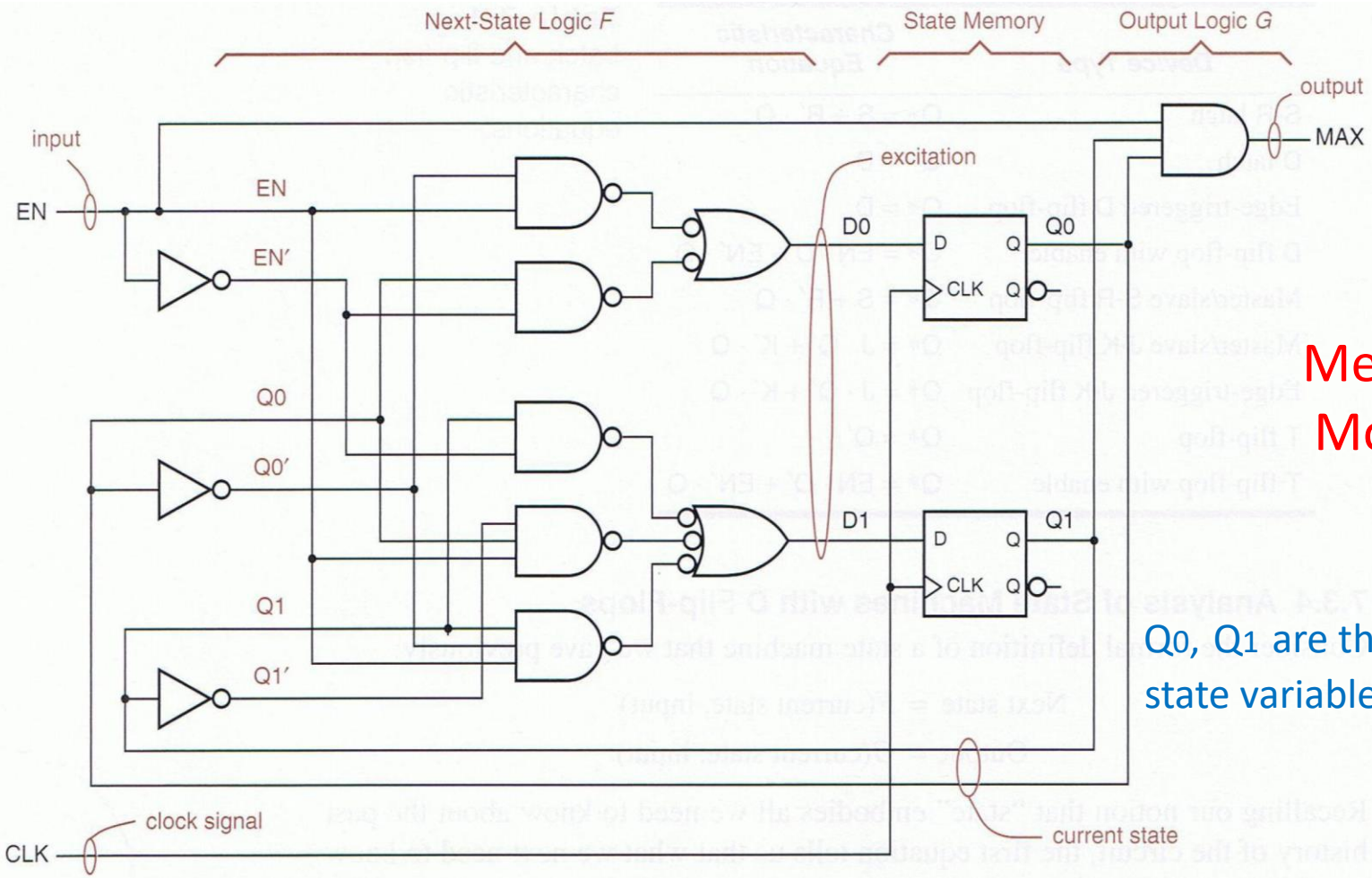

Figure 7-38 Clocked synchronous state machine using positive-edge-triggered D flip-flops.

Mealy or Moore?

Q_0, Q_1 are the state variables

Example of an FSM Logic Circuit

Excitation equations	Charateristic equations	Transition equations
$D0 = Q0 \cdot EN' + Q0' \cdot EN$	$Q0* = D0$	$Q0* = Q0 \cdot EN' + Q0' \cdot EN$
$D1 = Q1 \cdot EN' + Q1' \cdot Q0 \cdot EN + Q1 \cdot Q0' \cdot EN$	$Q1* = D1$	$Q1* = Q1 \cdot EN' + Q1' \cdot Q0 \cdot EN + Q1 \cdot Q0' \cdot EN$

Output(s) equation(s)

$MAX = Q1 \cdot Q0 \cdot EN$

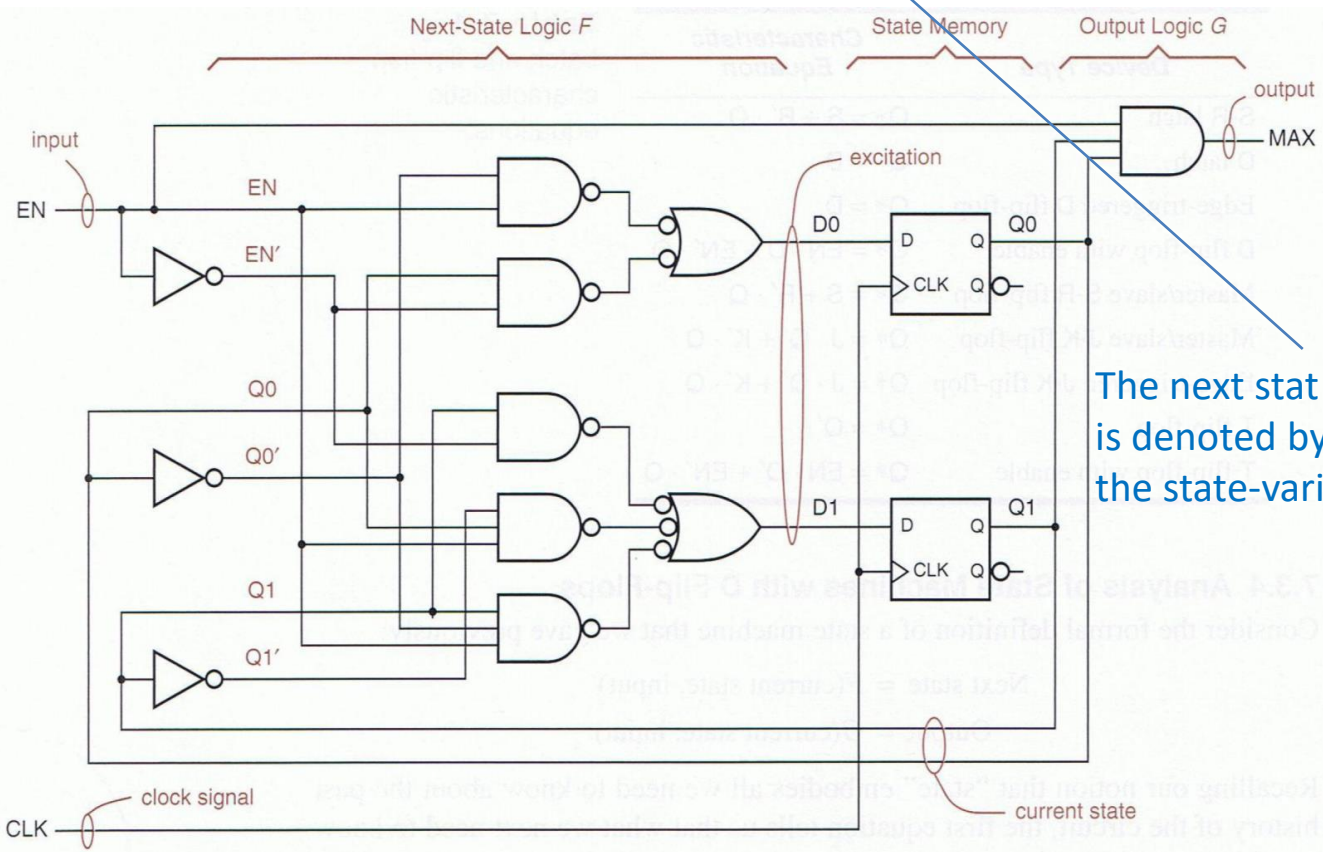

Figure 7-38 Clocked synchronous state machine using positive-edge-triggered D flip-flops.

The next stat value after a clock tick is denoted by appending a star (*) to the state-variable name

Transition, State and State/Output Tables

Transition equations

$$Q0* = Q0 \cdot EN' + Q0' \cdot EN$$
$$Q1* = Q1 \cdot EN' + Q1' \cdot Q0 \cdot EN + Q1 \cdot Q0' \cdot EN$$

Output(s) equation(s)

$$MAX = Q1 \cdot Q0 \cdot EN$$

For each combination of current state and input value, the transition equations predict the next state

(a)

	EN	
Q1 Q0	0	1
00	00	01
01	01	10
10	10	11
11	11	00
	Q1* Q0*	

(b)

	EN	
S	0	1
A	A	B
B	B	C
C	C	D
D	D	A
	S*	

(c)

	EN	
S	0	1
A	A, 0	B, 0
B	B, 0	C, 0
C	C, 0	D, 0
D	D, 0	A, 1
	S*, MAX	

Table 7-2 Transition, state, and state/output tables for the state machine in Figure 7-38.

States coded

State Diagram for a Mealy Machine

	EN	
S	**0**	**1**
A	A, 0	B, 0
B	B, 0	C, 0
C	C, 0	D, 0
D	D, 0	A, 1
	S*, MAX	

Figure 7-39
State diagram corresponding to the state machine of Table 7-2.

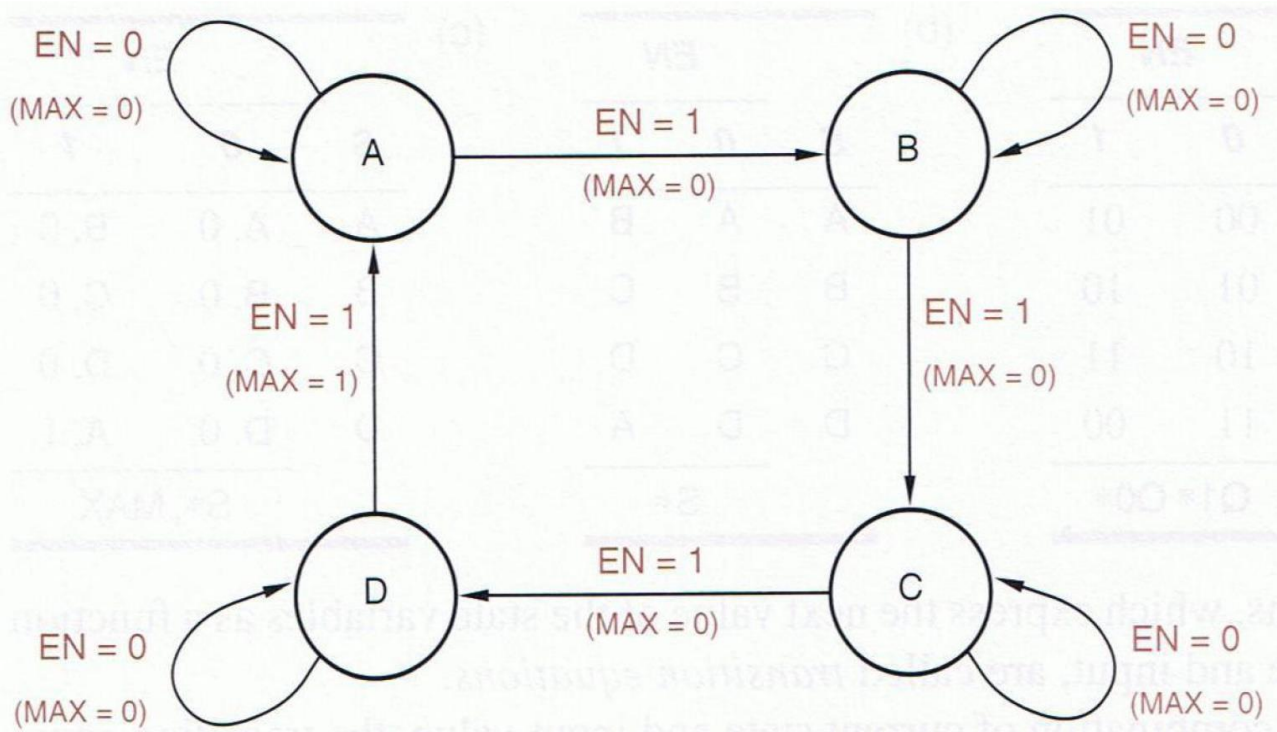

A sate diagram presents the information from the state/output table in a graphical format.

Outputs in a Moore Machine

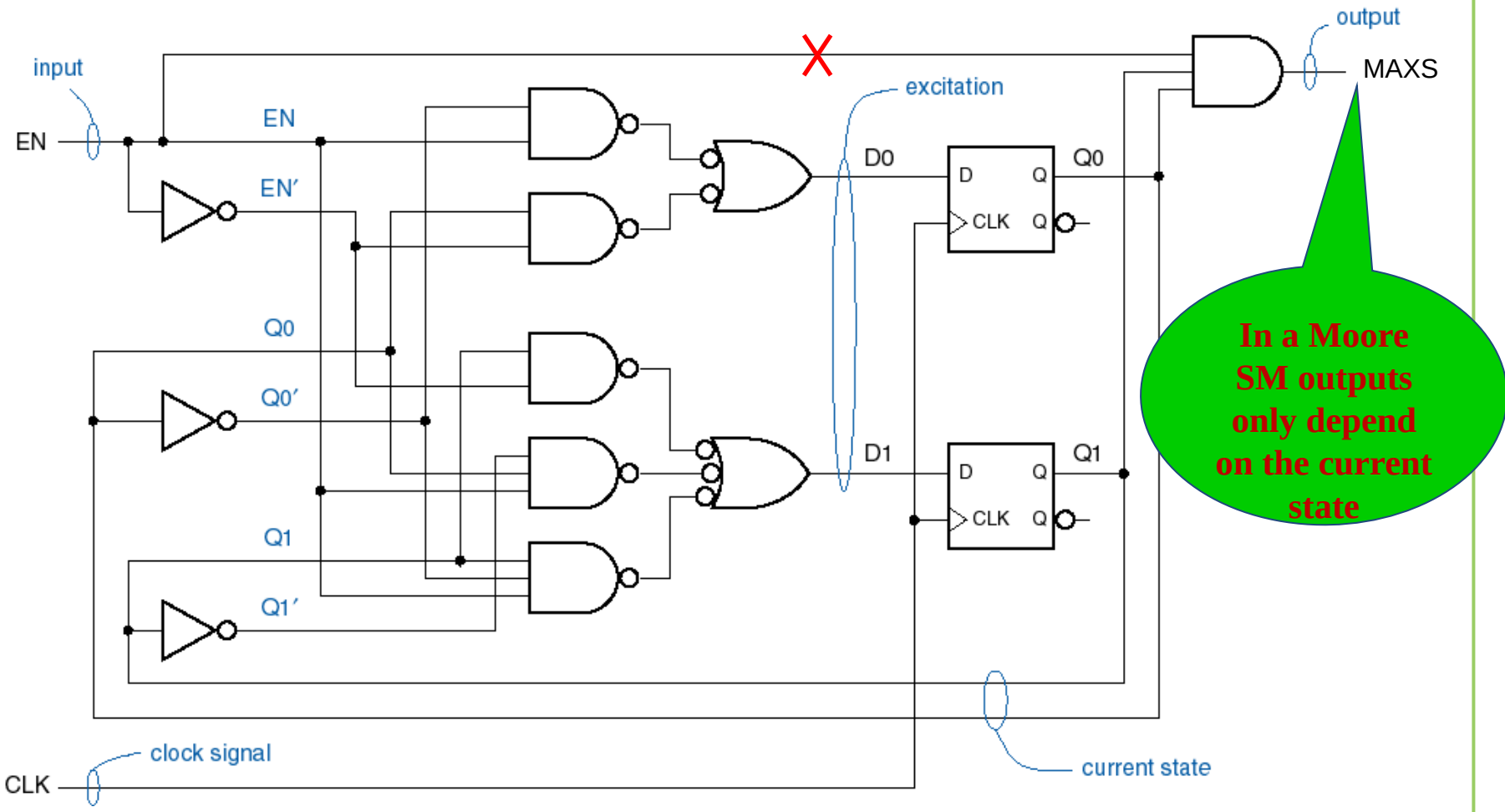

$$MAXS = Q0 \cdot Q1$$

Outputs in a Moore Machine

Table 7-3
State/output table for a Moore machine.

	EN		
S	**0**	**1**	**MAXS**
A	A	B	0
B	B	C	0
C	C	D	0
D	D	A	1
	S*		

State Diagram for a Moore Machine

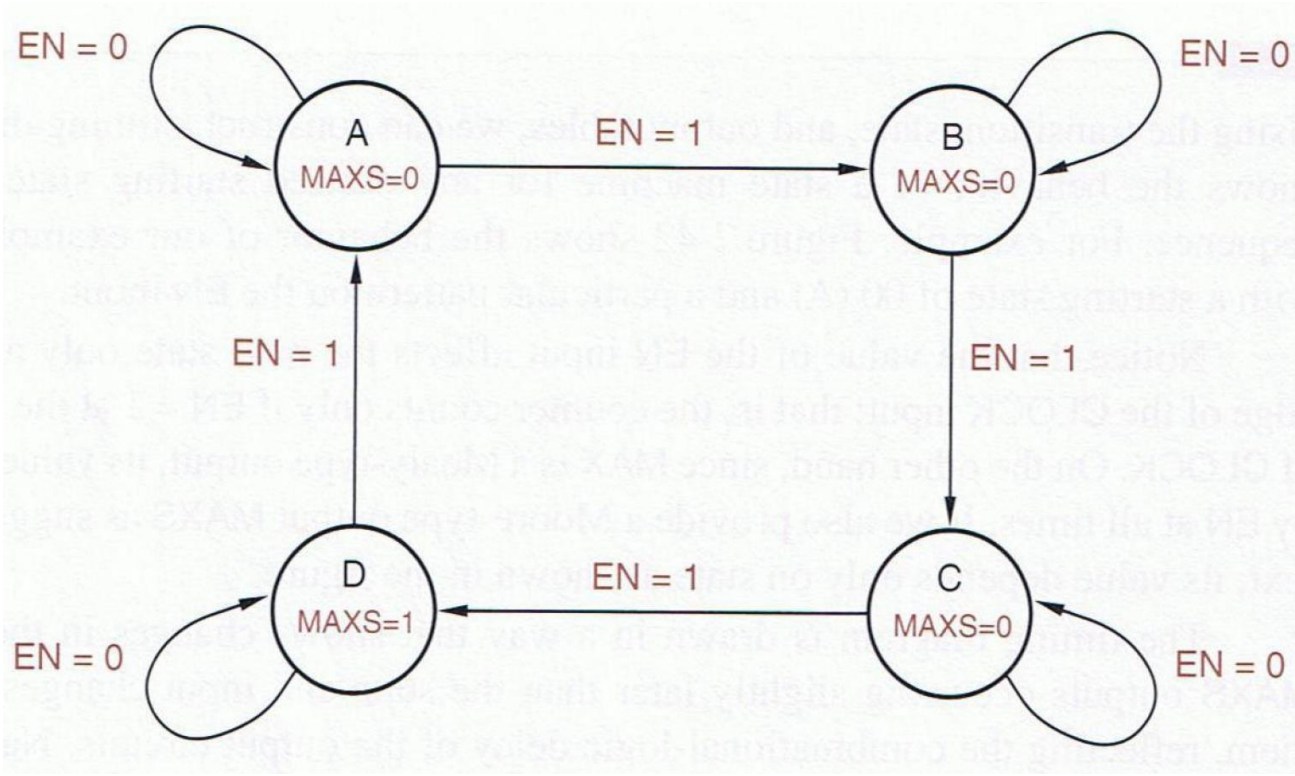

S	EN 0	EN 1	MAXS
A	A	B	0
B	B	C	0
C	C	D	0
D	D	A	1
	S*		

Figure 7-40
State diagram corresponding to the state machine of Table 7-3.

Redrawn Logic Diagram

Transition equations

$$Q0* = Q0 \cdot EN' + Q0' \cdot EN$$
$$Q1* = Q1 \cdot EN' + Q1' \cdot Q0 \cdot EN + Q1 \cdot Q0' \cdot EN$$

Output(s) equation(s)

$$MAX = Q1 \cdot Q0 \cdot EN$$

Figure 7-41 Redrawn logic diagram for a clocked synchronous state machine.

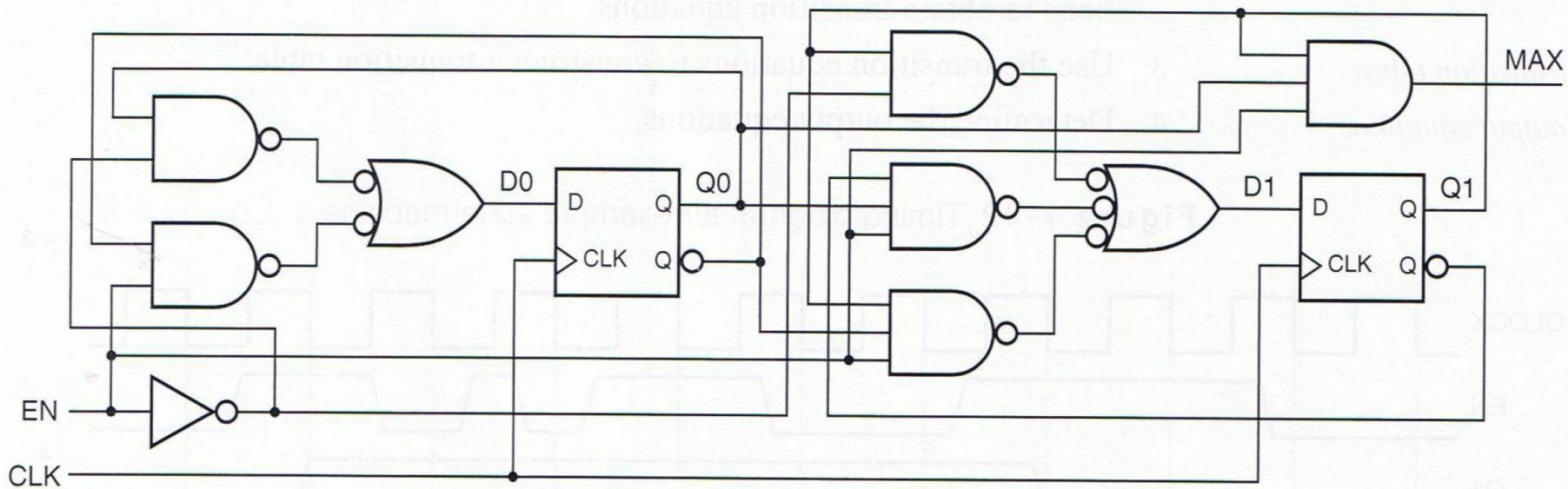

The only circuit difference is that now we used the flip-flops' QN outputs (which are the complement of Q) to save a couple of inverts

Summary to analyse a FSM based on D flip-flops

- Based on the logic diagram or other description of the excitations logic, determine the excitation equations for the flip-flop D inputs (D_0, D_1, etc.)
- Substitute the symbol for each variable's next state (Q0*, Q1*, etc) into the left-hand side of the corresponding excitation equation to obtain transition equations
- Use the transition equations to construct a transition table
- Determine the output equations
- Add output values to the transition table for each state (Moore) or sate/input combination (Mealy) to create a transition/output table.

Timing Diagram

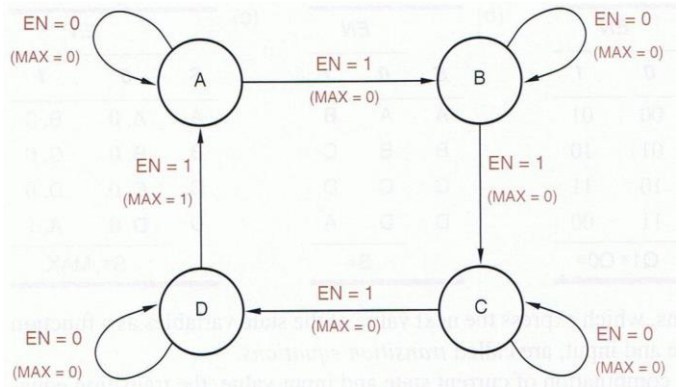

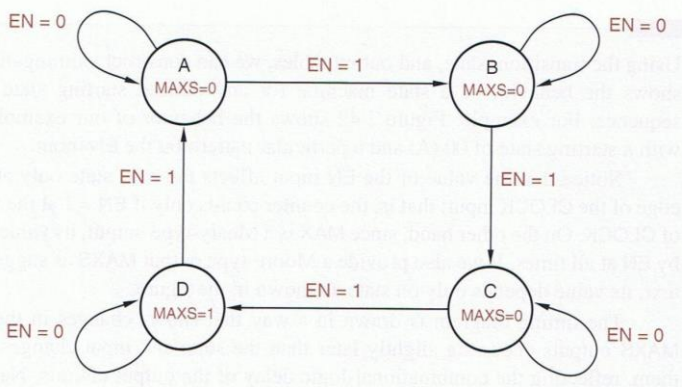

Figure 7-42 Timing diagram for example state machine.

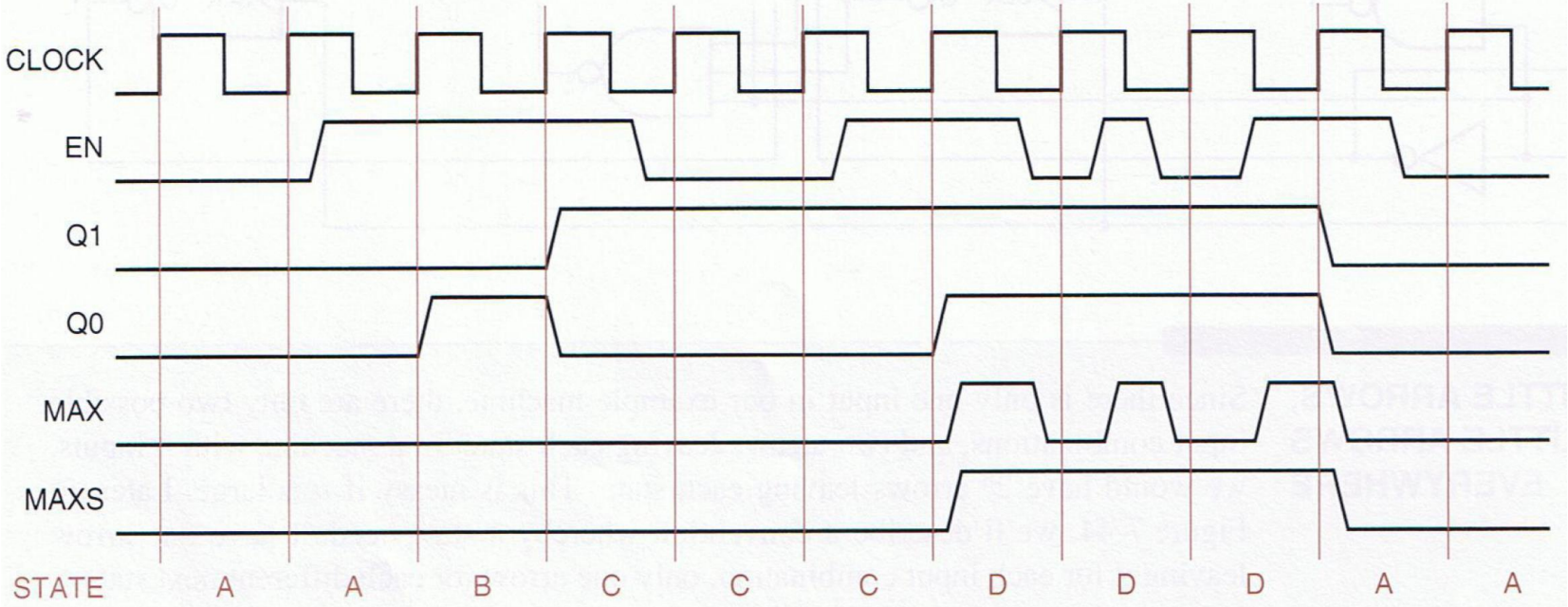

Timing parameters (revisited)

- Tsetup
  - is the minimum time that the input must be stabilized before the clock signal transition
- Thold
  - is the minimum time that the input must remain at the same value, after the clock signal transition
- $T_{p,LH}$ ->propagation time LOW-to-HIGH
  - is the propagation time required for a change in the output from low to high level
- $T_{p,HL}$ ->propagation time HIGH-to-LOW
  - is the propagation time required for a change in the output from high to low level

Timing Analysis

- Purpose
  - Obtain all the circuit delays with the aim of determine the maximum operating frequency
- Ideal vs. real circuits
  - Real circuits exhibit propagation, setup and hold times
  - In ideal circuits all these timing parameters are zero
- Simplifications
  - Single clock domain fully synchronous circuits
  - Flip-flop "hold time" lower than both propagation times (T_{pLH} and T_{pHL})

Timing Analysis - A Simple Example

- Flip-flop(s) without combinatorial logic in between / in the feedback path
- What is the maximum operating frequency / minimum period of CLK?

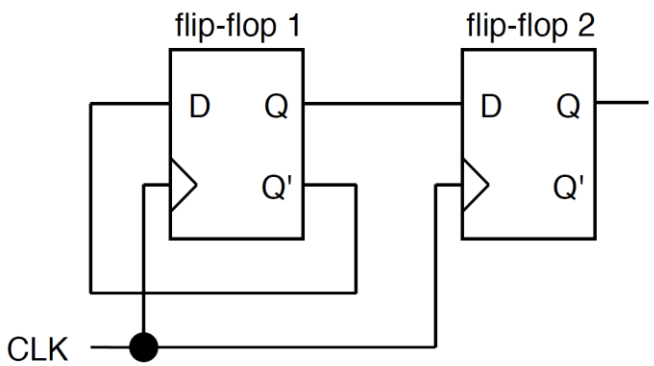

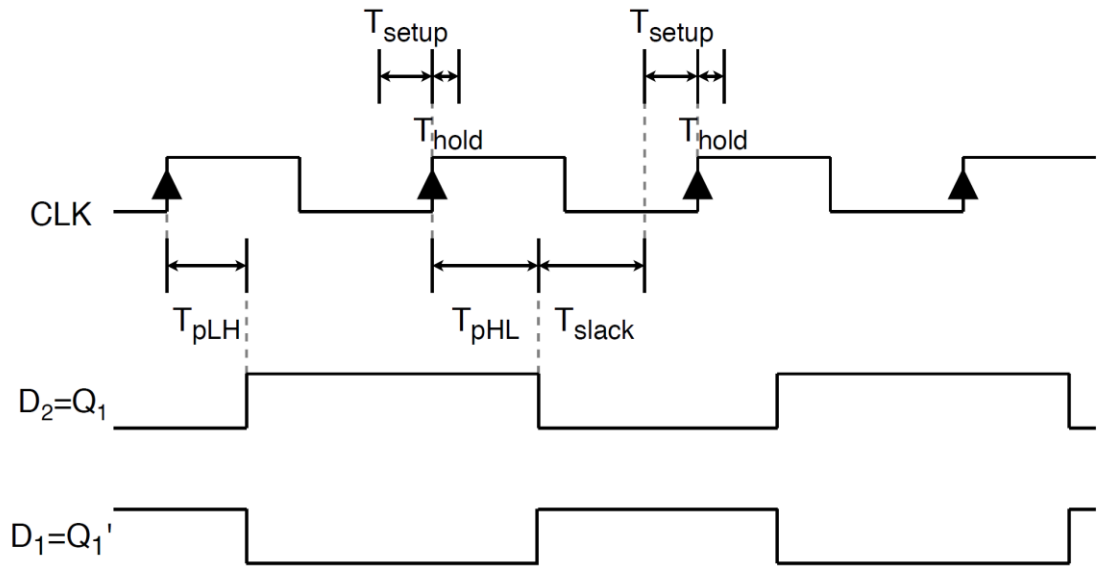

T_{min} *when* $T_{slack} = 0$ $\quad T_{min} = \max(T_{pHL}, T_{pLH}) + T_{setup}$ $\quad f_{max} = \frac{1}{T_{min}}$

Timing Analysis - Another Example

- Flip-flop(s) with simple logic gate in between / in the feedback path
- What is the maximum operating frequency / minimum period of CLK?

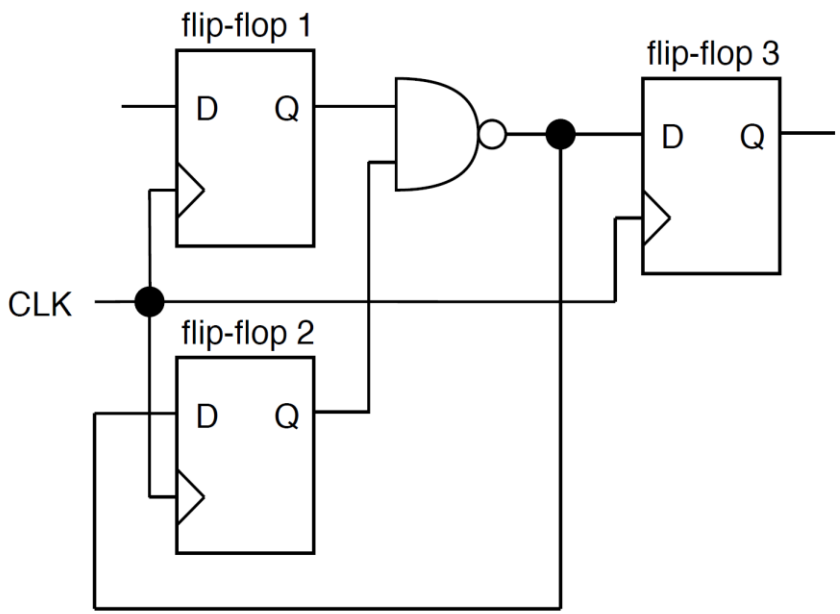

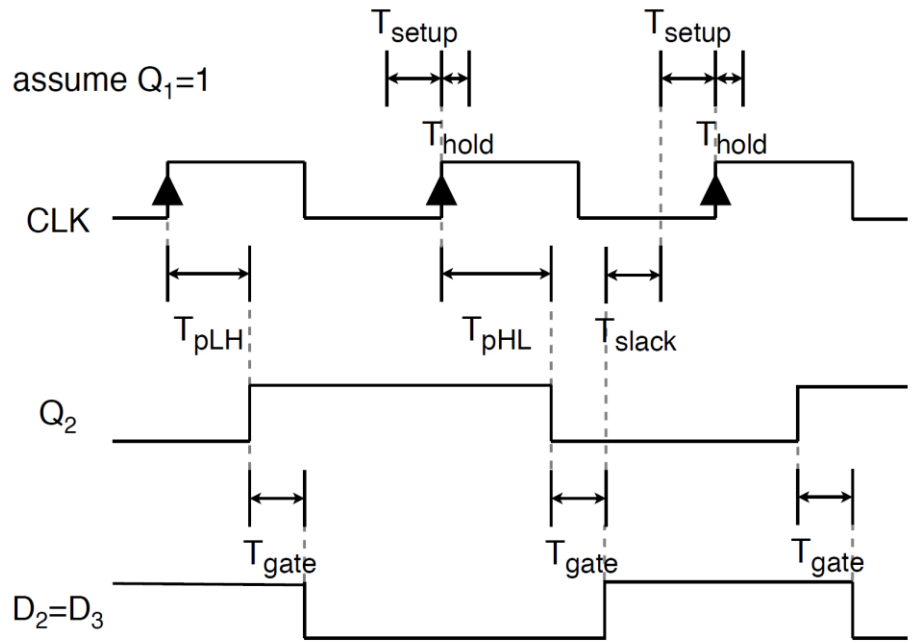

T_{min} *when* $T_{slack} = 0$ $\quad T_{min} = \max(T_{pHL}, T_{pLH}) + T_{gate} + T_{setup}$ $\quad f_{max} = \frac{1}{T_{min}}$

Synchronous Circuit General Structure

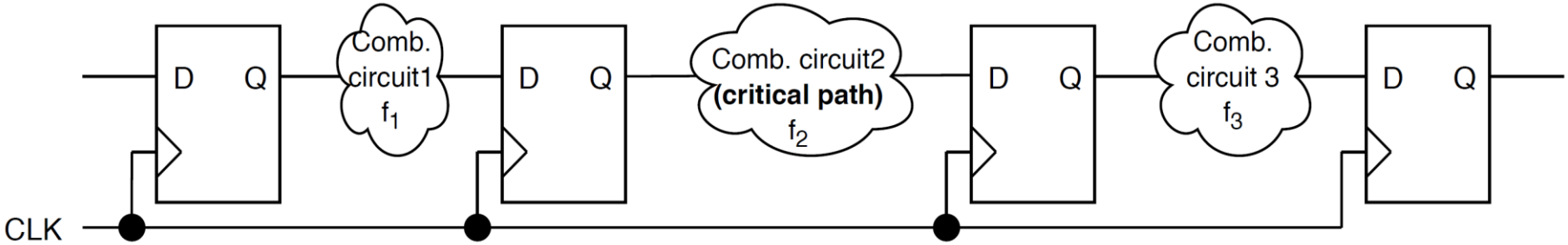

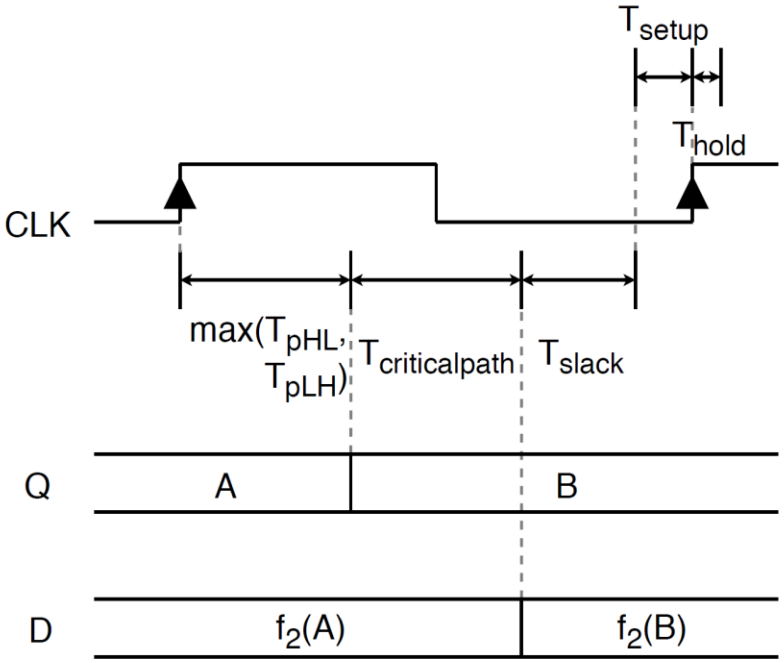

What is the maximum operating frequency / minimum period of CLK?

$$T_{min} \; when \; T_{slack} = 0$$

$$T_{min} = \max(T_{pHL}, T_{pLH}) + T_{criticalpath} + T_{setup}$$

$$f_{max} = \frac{1}{T_{min}}$$

FSM Timing Analysis

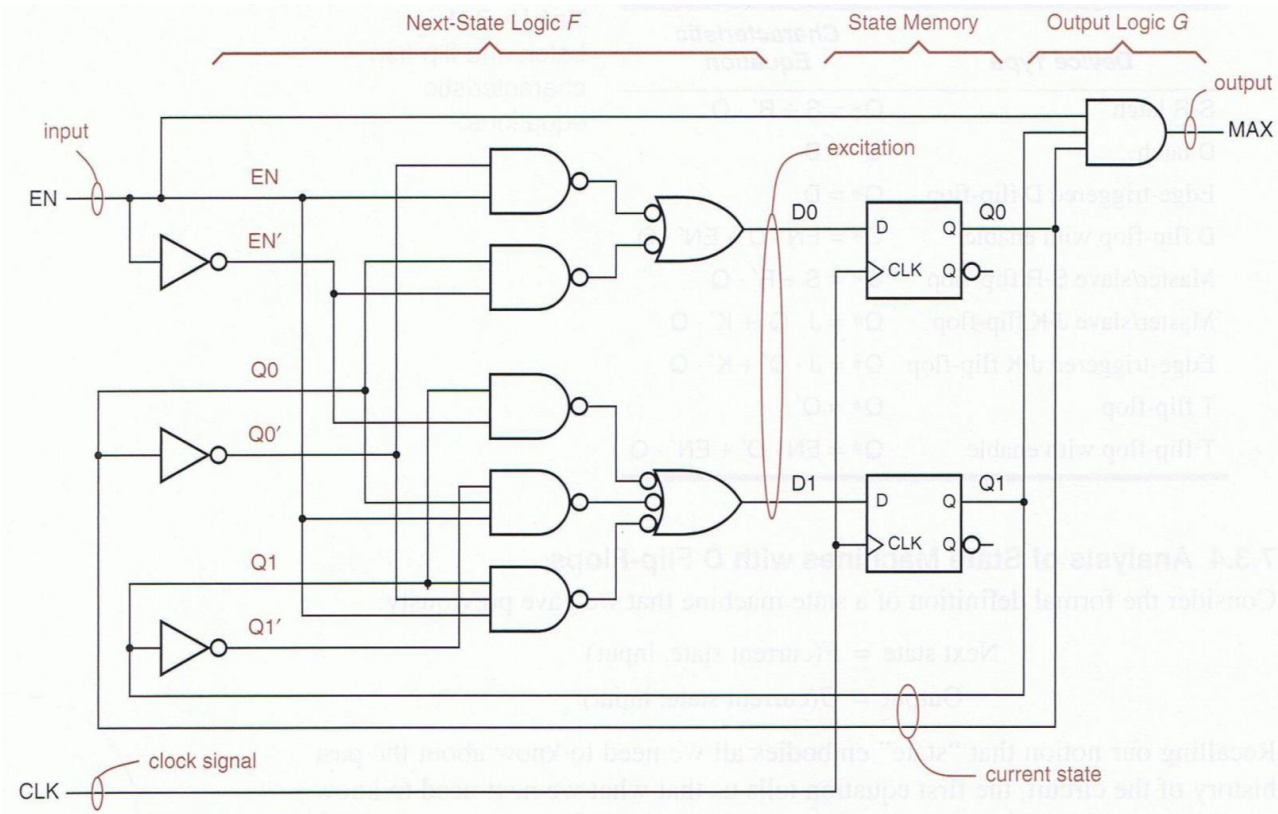

Figure 7-38 Clocked synchronous state machine using positive-edge-triggered D flip-flops.

T_{min} = ?

f_{max} = ?

Consider:

T_{pHL} = 4 ns

T_{pLH} = 5 ns

T_{setup} = 3 ns

T_{hold} = 1ns

T_{gate} = 4 ns

(assume that all gates exhibit the same delay)

Another FSM Example

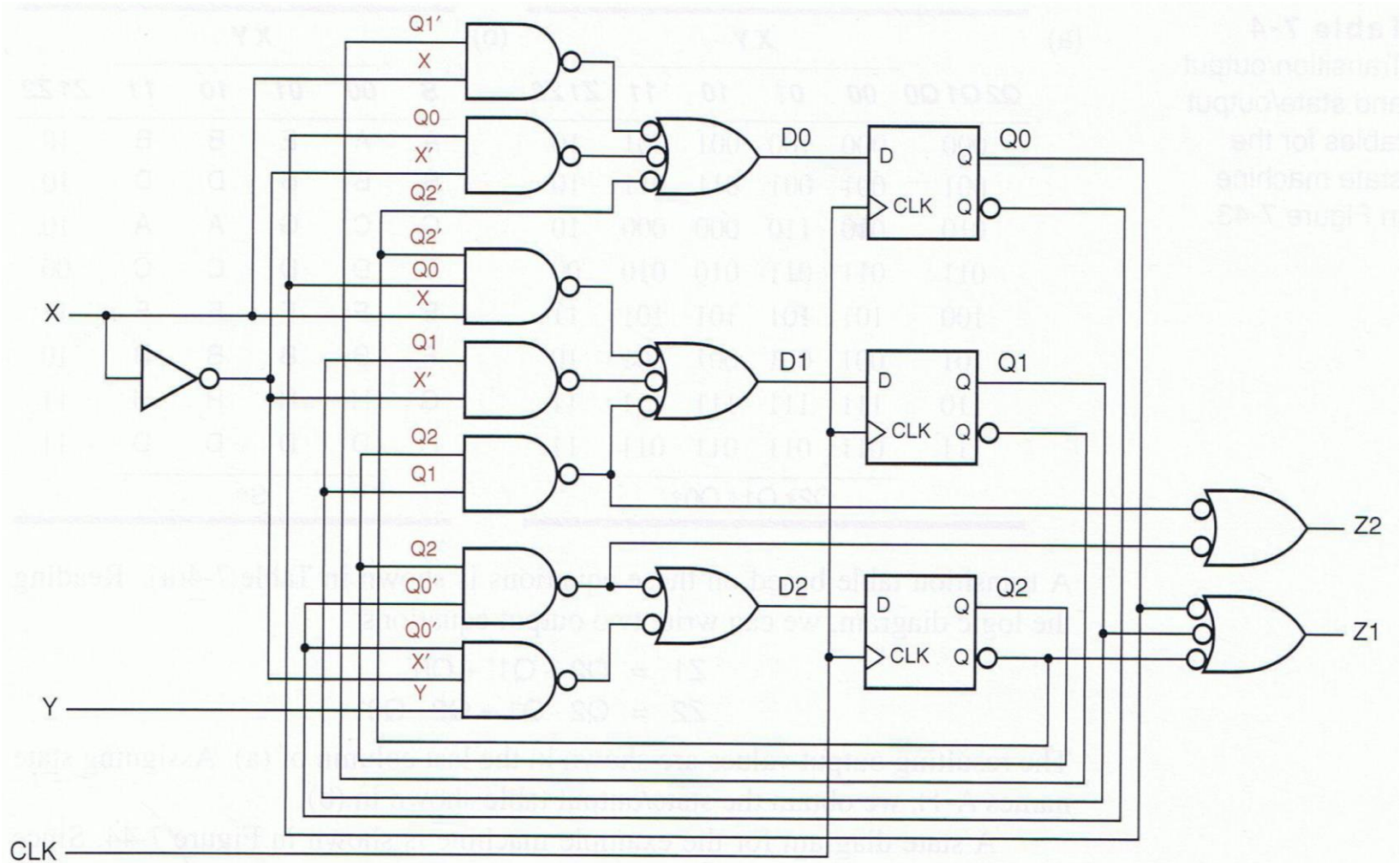

Figure 7-43 A clocked synchronous state machine with three flip-flops and eight states.

Another FSM Example
Excitation Equations

$$D0 = Q1' \cdot X + Q0 \cdot X' + Q2$$

$$D1 = Q2' \cdot Q0 \cdot X + Q1 \cdot X' + Q2 \cdot Q1$$

$$D2 = Q2 \cdot Q0' + Q0' \cdot X' \cdot Y$$

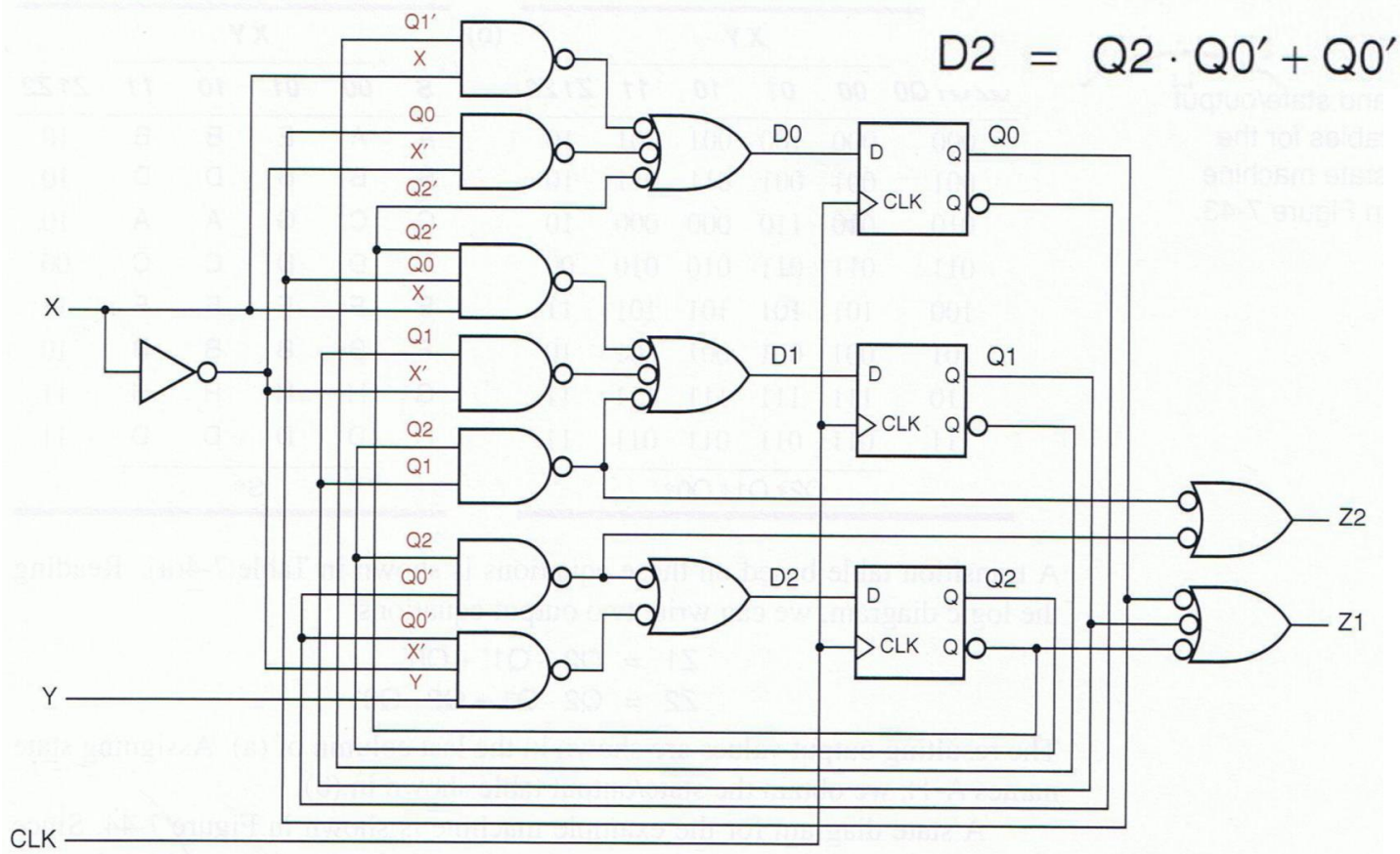

Figure 7-43 A clocked synchronous state machine with three flip-flops and eight states.

Another FSM Example
Transition Equations

$$Q0^* = Q1' \cdot X + Q0 \cdot X' + Q2$$

$$Q1^* = Q2' \cdot Q0 \cdot X + Q1 \cdot X' + Q2 \cdot Q1$$

$$Q2^* = Q2 \cdot Q0' + Q0' \cdot X' \cdot Y$$

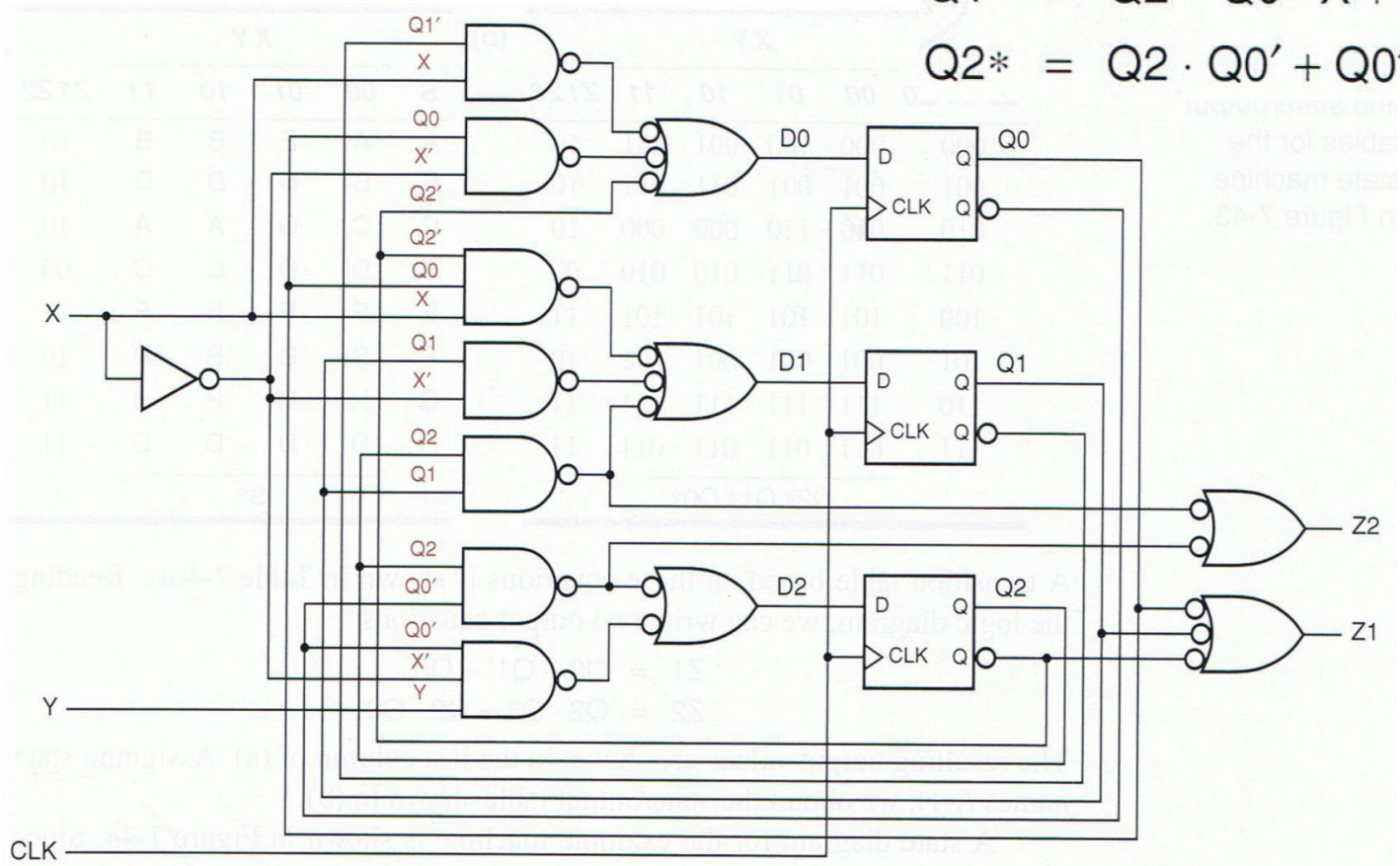

Figure 7-43 A clocked synchronous state machine with three flip-flops and eight states.

Another FSM Example
Output Equations

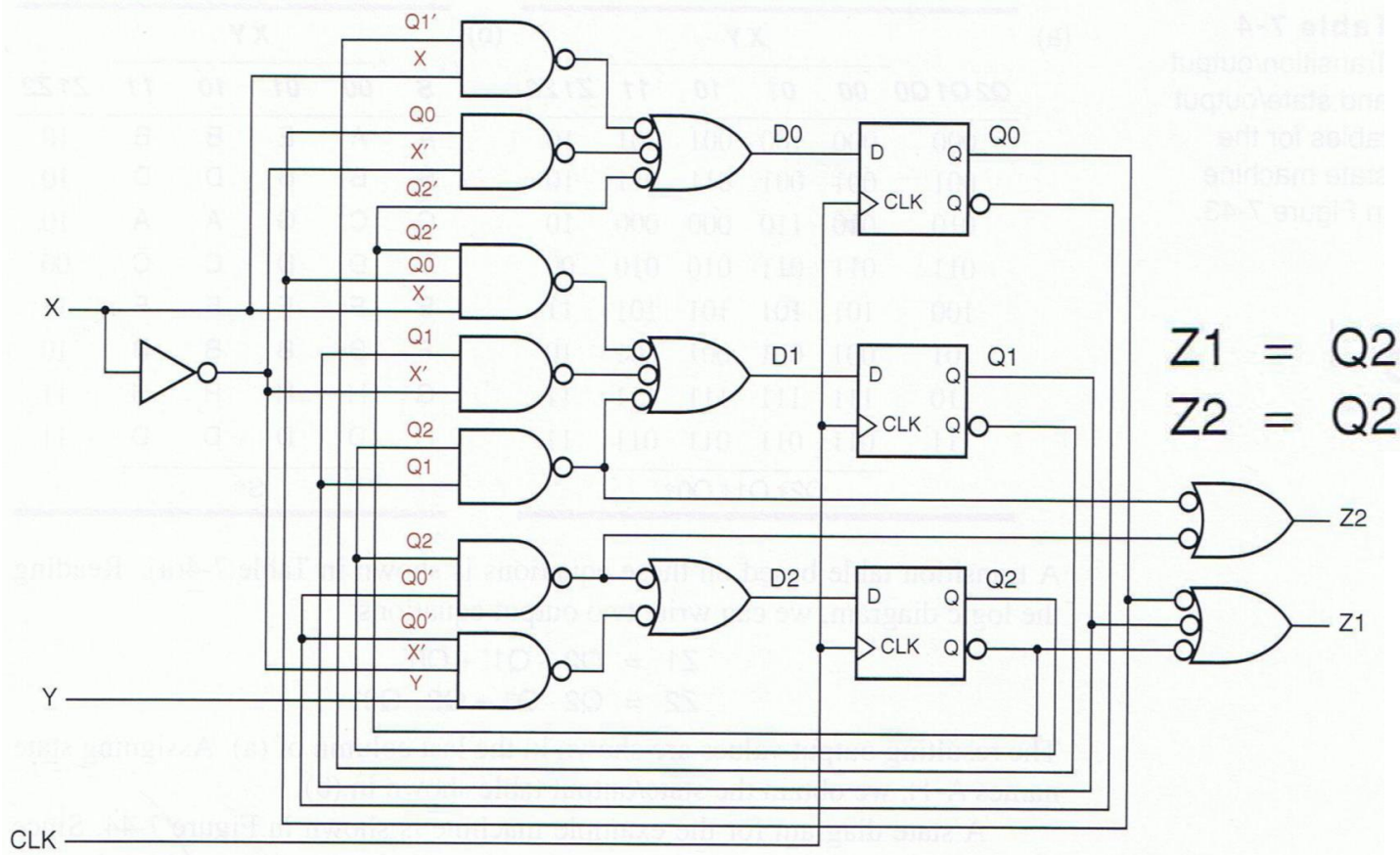

$$Z1 = Q2 + Q1' + Q0'$$

$$Z2 = Q2 \cdot Q1 + Q2 \cdot Q0'$$

Figure 7-43 A clocked synchronous state machine with three flip-flops and eight states.

Another FSM Example – Transition / Output and State / Output Tables

$$Q0^* = Q1' \cdot X + Q0 \cdot X' + Q2$$
$$Q1^* = Q2' \cdot Q0 \cdot X + Q1 \cdot X' + Q2 \cdot Q1$$
$$Q2^* = Q2 \cdot Q0' + Q0' \cdot X' \cdot Y$$

$$Z1 = Q2 + Q1' + Q0'$$
$$Z2 = Q2 \cdot Q1 + Q2 \cdot Q0'$$

Table 7-4 Transition/output and state/output tables for the state machine in Figure 7-43.

(a)

	XY				
Q2 Q1 Q0	00	01	10	11	Z1 Z2
000	000	100	001	001	10
001	001	001	011	011	10
010	010	110	000	000	10
011	011	011	010	010	00
100	101	101	101	101	11
101	001	001	001	001	10
110	111	111	111	111	11
111	011	011	011	011	11
	Q2* Q1* Q0*				

(b)

	XY				
S	00	01	10	11	Z1 Z2
A	A	E	B	B	10
B	B	B	D	D	10
C	C	G	A	A	10
D	D	D	C	C	00
E	F	F	F	F	11
F	B	B	B	B	10
G	H	H	H	H	11
H	D	D	D	D	11
	S*				

Another FSM Example
State Diagram

Figure 7-44 State diagram corresponding to Table 7-4.

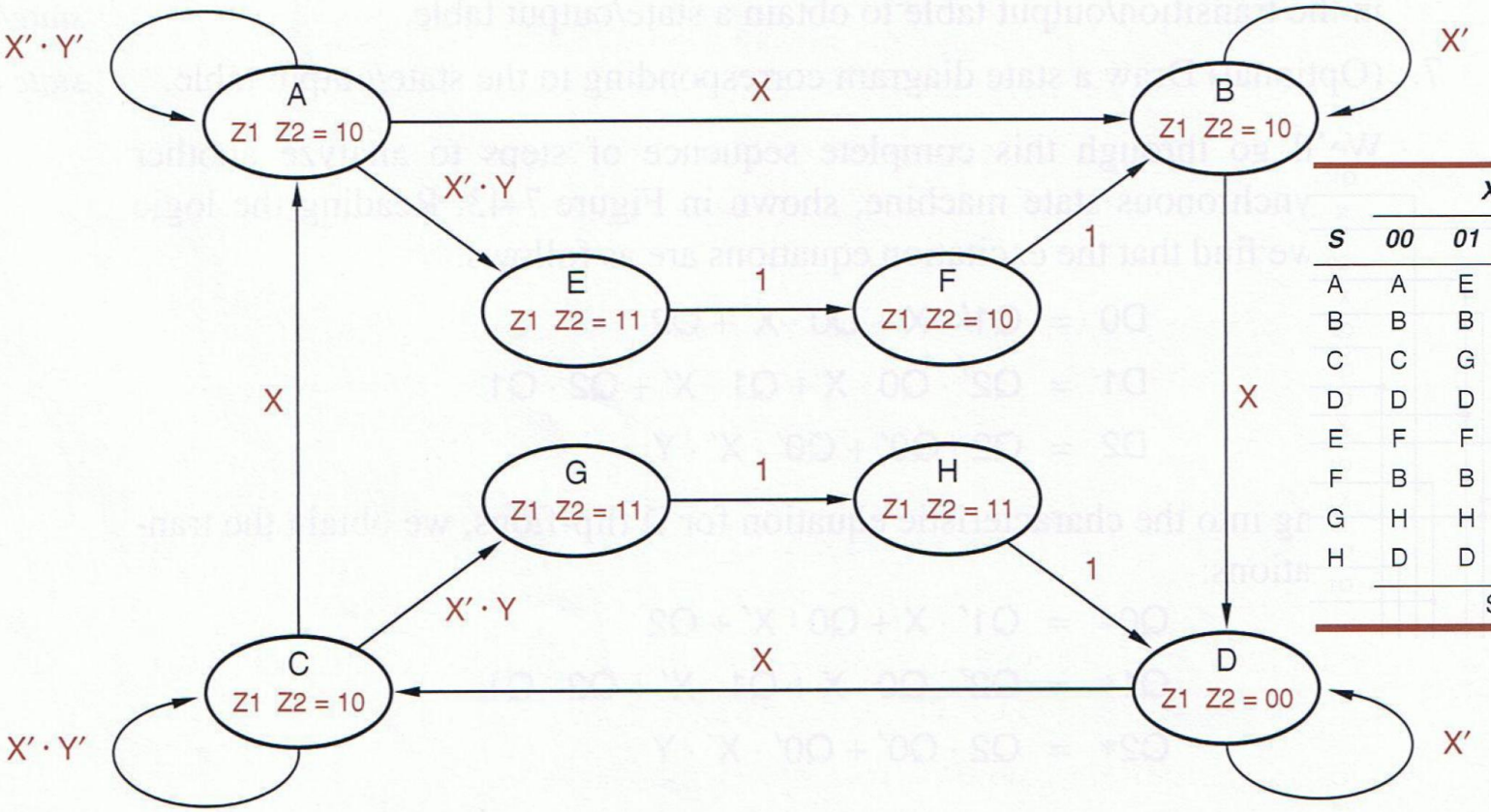

	XY				
S	00	01	10	11	Z1 Z2
A	A	E	B	B	10
B	B	B	D	D	10
C	C	G	A	A	10
D	D	D	C	C	00
E	F	F	F	F	11
F	B	B	B	B	10
G	H	H	H	H	11
H	D	D	D	D	11
	S*				

Conclusion

- At the end of this lecture and corresponding lab, it is fundamental to know how to analyse sequential circuits described by finite state machines and implemented with D type flip-flops, including functional/behavioral and timing aspects
- Plan for the next lectures
  - Synthesis of sequential circuits (Finite State Machines)
  - Standard sequential circuits
    - Registers and shift registers
    - Counters